DGG

BROCHURE / CATALOG >>>>>

https://www.dggpower.com

DGG 登高

DGG 登高

(H)GW9 – 12

ISOLATION SWITCH / DISCONNECTOR

OUTDOOR / THREE-PHASE / HIGH-VOLTAGE

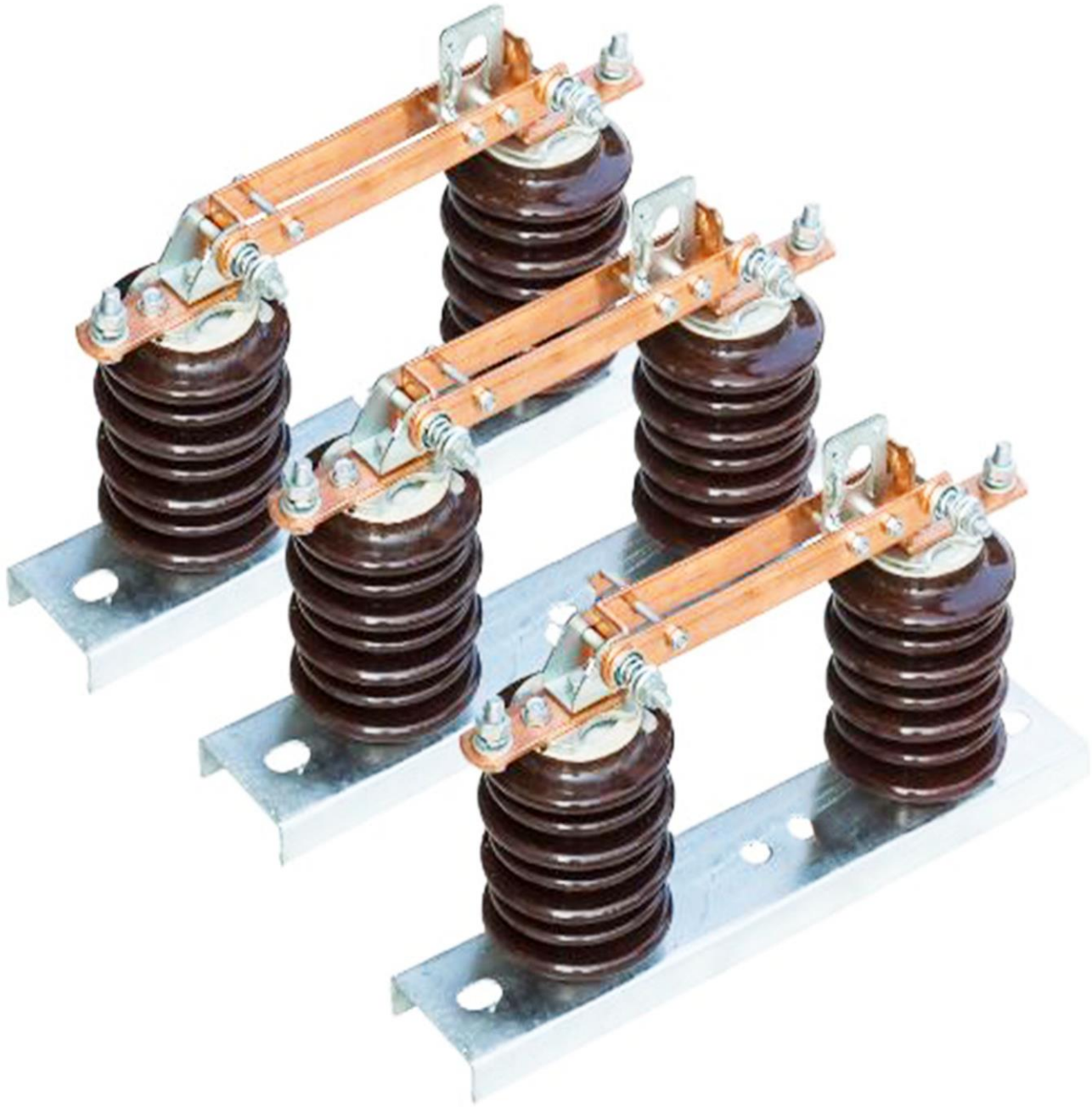

登高电气有限公司
DENGGAO ELECTRIC CO.,LTD.

(H)GW9 - 12 OUTDOOR ISOLATION SWITCH / DISCONNECTOR

1. SUMMARY

(H)GW9-12 series outdoor high-voltage AC single-phase disconnector/isolation switch (hereinafter referred to as "disconnector/isolation switch") are used for switching 10kV lines under voltage and no load, and for electrical isolation of overhauled high-voltage buses, circuit breakers and other electrical equipment from live high-voltage lines.

Disconnectors/Isolation Switch conforms to the technical standards of GB/T 1985-2014 voltage and current isolation switches and earthing switches, DL/T 486-2010 High Voltage AC isolation switches and earthing switches.

2. MODEL AND MEANING

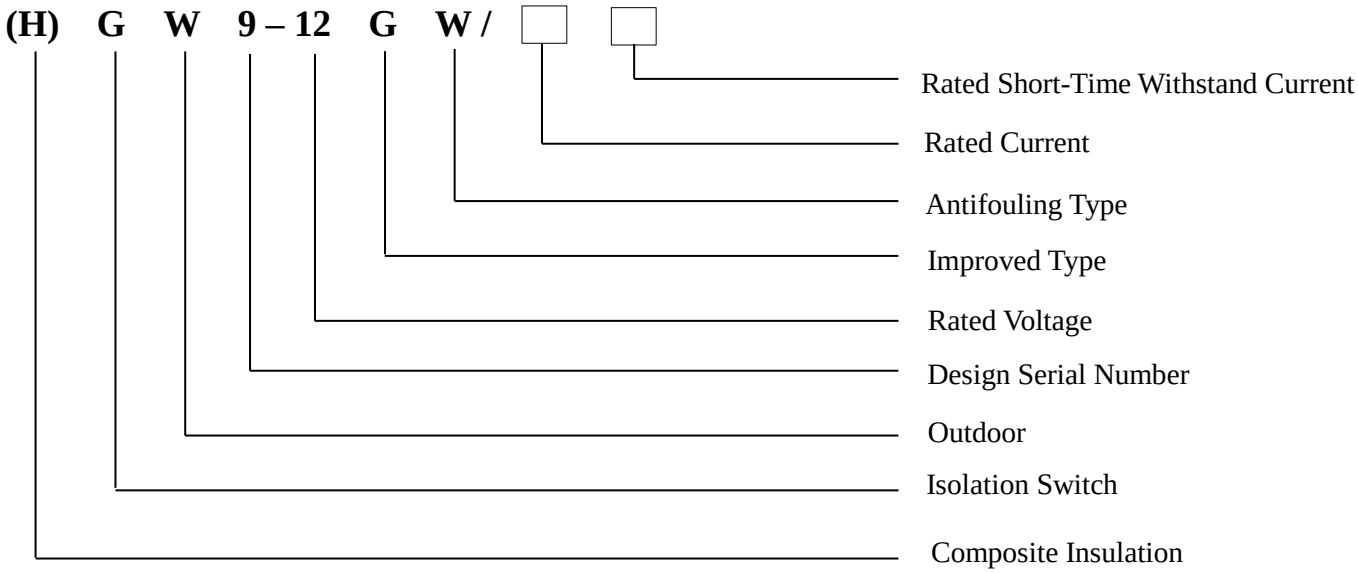

3. USAGE: ENVIRONMENTAL CONDITIONS

1. Altitude: Not more than 1000m / Icing thickness: not more than 20mm
2. Ambient air temperature: maximum +40 ℃, minimum - 40 ℃, daily temperature difference 25K
3. Humidity: daily average relative humidity ≤ 95%, monthly average relative humidity ≤ 90%
4. Solar Radiation Intensity (outdoor)/ Pollution level: 0.1W/cm^2 / e-level
5. Winding speed / pressure (outdoor): 0.5m/s / 700Pa
6. Earthquake resistance: horizontal acceleration 0.3 m/s^2, vertical acceleration 0.15m/s^2
7. Safety factor: sinusoidal resonance three-cycle wave, safety factor above 1.67

(H)GW9 - 12 OUTDOOR ISOLATION SWITCH / DISCONNECTOR

4. MAIN ADVANTAGES

1. Significant improvements have been made in product structure and corrosion resistance. After closing, the conductive plate has a self-locking function. When opening, pull the shackle to unlock automatically. It is installed with a conductive spring and spring cover on the base, a lock plate of the self-locking device, a lock hook, and a lock hook spring. All standard parts are made of SUS304 non-magnetic stainless steel, with surface brightening treatment and corrosion resistance.
2. The conductive plate has no stop lock, the maximum rotation opening is not less than 160 degrees, and there is no stainless steel yellow clip at the home of the conductive plate. It is passivized, riveted, and installed with high elasticity to maintain the contact pressing force.
3. The main electric circuit parts are made of T2 red copper, and the static contact and terminal block are drawn by integral profiles, which completely solve the problem of poor contact caused by the welding of static contact and terminal block in the past.
4. All the conductive parts of the main circuit are silver plated with a thickness of no less than 20mm. with the closed anti-oxidation treatment technology, the surface coating is bright and durable, with strong anti-oxidation capacity, excellent conductivity, and circuit resistance of ￡80mm.
5. The terminal block is of double hole structure, made of hard copper alloy, and the outer layer is silver plated.
6. The external pressure contact spring is adopted, and the conductive contact surface contacts the "fixed arc" structure, with high uniform pressure and self-purification. The contact pressure remains unchanged for a long time to ensure the safety and reliability of the product for long-term travel.
7. The insulator is made of high-strength porcelain or silicone rubber composite material and designed with a large creepage distance, which meets the requirements of e-class anti-pollution, and has good anti-pollution ability and long-distance travel characteristics.
8. The minimum distance to the ground of live parts is greater than 200mm, and the distance between fractures is greater than 230mm, which is suitable for high-altitude areas.

(H)GW9 - 12 OUTDOOR ISOLATION SWITCH / DISCONNECTOR

5. TECHNICAL PARAMETER TABLE

No.	Item		Unit	Parameters	
1	Rated Frequency		Hz	50 / 60	
2	Rated Voltage		kV	12	
3	Rated Current		A	630	1250
4	Rated Short-Time Withstand Current and Duration		kA / s	20 / 4	25 / 4
5	Rated Peak Withstand Current		kA	50 (63)	
6	Rated Short-Time Power Frequency Withstand Voltage	Phase, to Earth (dry)	kV / min	42 / 1	
		Fracture (dryt)		48 / 1	
		Phase, to Earth (wet)		30 / 1	
		Fracture (wet)		36 / 1	
7	Rated Lightning Impulse Withstand Voltage	Phase, to Earth	kV	75	
		Fracture		85	
8	Circuit Resistance		μΩ	≤ 80	
9	Mechanical Life		Times	3000	
10	Pollution Grade			E - level	
11	Creepage		mm	≥ 372	
If the altitude is over 1000m, the rated insulation level should be modified as appropriate					

(H)GW9 - 12 OUTDOOR ISOLATION SWITCH / DISCONNECTOR

6. OUTLINE AND INSTALLATION DIMENSION

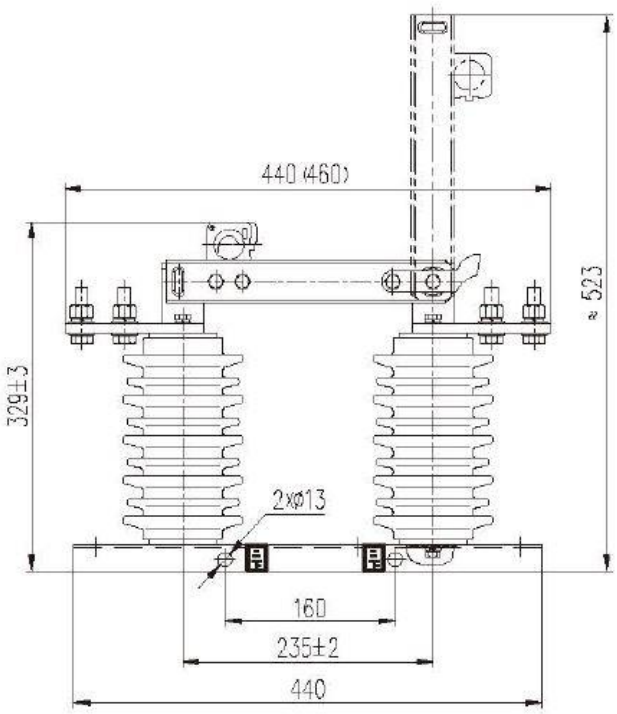

注：括号内的尺寸适用于额定电流1250A的产品。

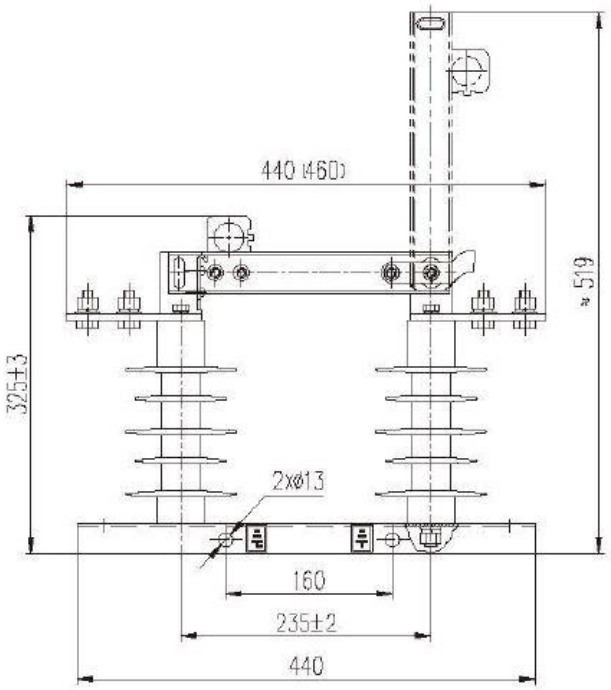

注：括号内的尺寸适用于额定电流1250A的产品。

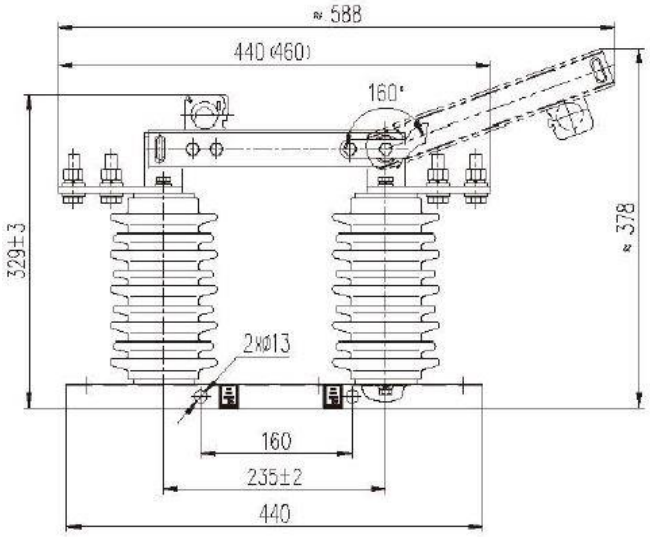

注：括号内的尺寸适用于额定电流1250A的产品。

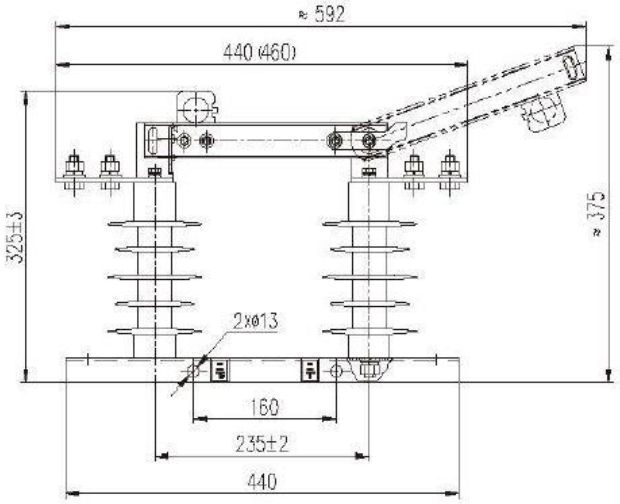

注：括号内的尺寸适用于额定电流1250A的产品。

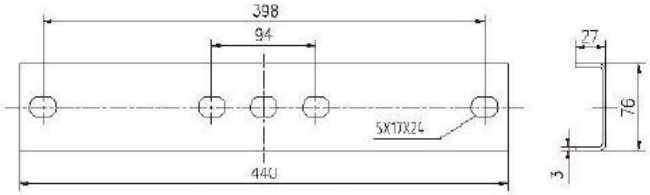

底座安装孔尺寸

© DENGGAO ELECTRIC CO. LTD; ALL RIGHTS RESERVED

登高电气有限公司
DENGGAO ELECTRIC CO.,LTD.
HEADQUATERS: NO. 208 WEI WU ROAD, ECONOMIC DEVELOPMENT ZONE, YUEQING-WENZHOU, ZHEJIANG-CHINA
PHONE NUMBER: 0577 – 57576678
EMAIL ADDRESS: sale@dggpower.com

DGG 登高