DGG

BROCHURE / CATALOG >>>>>

https://www.dggpower.com

DGG 登高

DGG 登高

(H)RW12 – 12

DROP-OUT FUSE CUTOUT

OUTDOOR / THREE-PHASE / NON-CERAMIC TYPE

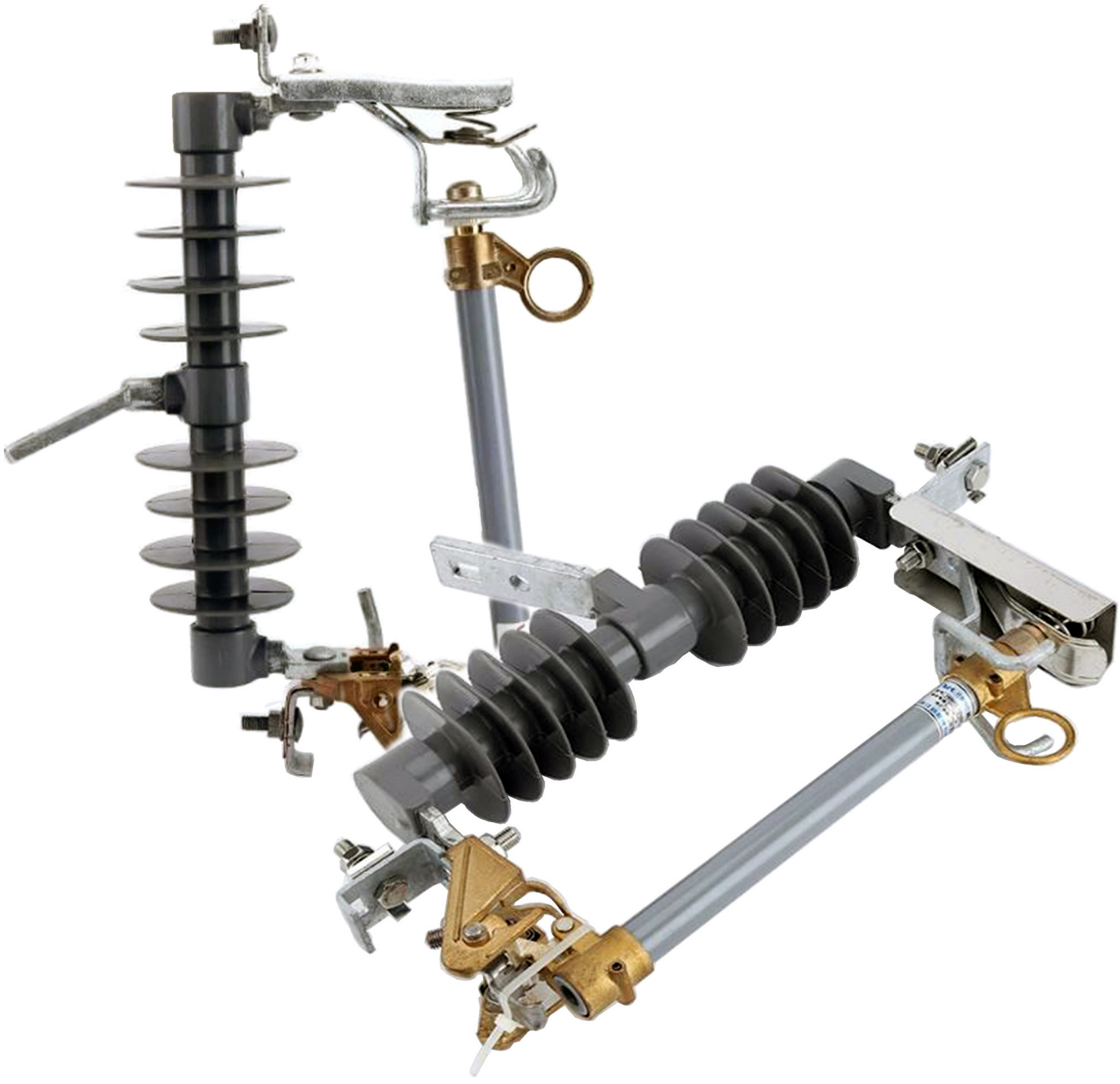

登高电气有限公司
DENGGAO ELECTRIC CO.,LTD.

(H)RW12 OUTDOOR THREE-PHASE DROP-OUT FUSE CUTOUT

1. SUMMARY

(H) RW12-12 (F) outdoor high voltage AC drop fuse (hereinafter referred to as "fuse") is applicable to the outdoor overhead distribution systems with a rated frequency of 50Hz and rated voltage of 10kV. It is used as a protective element of circuit or electrical equipment in case of overload or short circuit fault of a power system.

When traveling normally, the fuse is connected in series in the power line, the fuse is in a tensioned state, and the movable joint is locked. When the line fails, the fault current causes the fuse to blow, the movable joint is released, the fuse tube is quickly dropped, and the circuit is cut off, which plays a role in safety protection for the maintenance of the line and equipment. The load type fuse is added with elastic contact and arc extinguishing cover on the basis of the ordinary type, which is used to open and close the load current in the power system.

The fuse shall comply with technical standards such as GB / T 15166.3 - 2008 high voltage AC fuses - Part 3: injection fuses, DL / T 640 - 1997 outdoor AC high voltage drop tested fuses and fuse links ordering technical conditions.

2. MODEL AND MEANING

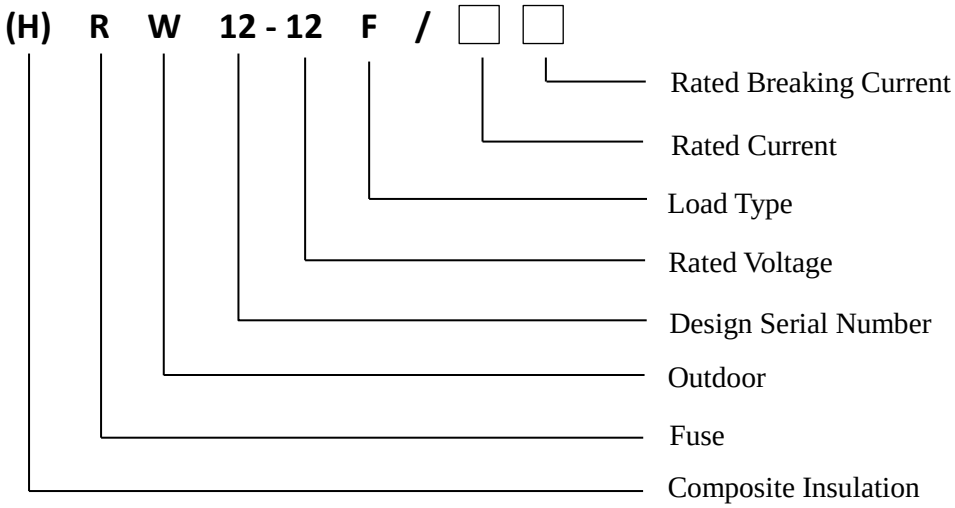

(H)RW12 OUTDOOR THREE-PHASE DROP-OUT FUSE CUTOUT

3. NORMAL USAGE CONDITIONS

1. The insulator is made of high-strength ceramic or imported silicone rubber insulation material, with large creepage distance design, pollution resistance and environmental adaptability, and excellent insulation performance, which meets the requirements of long-distance travel in high sea wave areas.
2. The upper contact adopts a silver pair design, and the contact stainless steel spring provides contact pressure to ensure good conductive contact, and the contact resistance is very small, no more than 300mW.
3. The lower contact adopts a silver pair design, which provides a pair of current paths and is not connected with the bare foot of the hinge shaft.
4. The fuse tube adopts an epoxy phenolic glass cloth tube with fibre lining with a special anti-ultraviolet coating, which has excellent anti-ultraviolet performance.
5. The parallel groove coupling is made of cast brass. Even if the dimensions are inconsistent, the connection becomes very simple due to the provision of two conduits.
6. The trunnion is made of high-strength cast bronze and silver plated on the surface. It is pressed on the surface of the hinge to ensure that the closing is aligned with the fuse tube.
7. The design of the baffle fully meets the rapid separation of the end, the cable strand pops up quickly, and the force transmitted to the fuse can be reduced when closing.
8. The collar joint ensures reliable tripping after cutting off.
9. The rated current of the fuse of the same family is large, up to 200A, and the breaking capacity can be strong, up to 16A.
10. According to the user's requirements, a fixed device for power inspection and grounding can be added to facilitate the user's power inspection and grounding operation.

(H)RW12 OUTDOOR THREE-PHASE DROP-OUT FUSE CUTOUT

4. TECHNICAL PARAMETER TABLE

No.	Item		Unit	Parameters	
1	Rated Frequency		Hz	50 / 60	
2	Rated Voltage		kV	12	
3	Rated Current for Fuse of the same family		A	≤ 100	≤ 200
4	Rated Breaking Current		kA	12.5	16
5	Rated Short-time Power Frequency Withstand Voltage	To Earth (Dry/Wet)	kV / min	42 / 1	
		Fracture (Dry/Wet)		48 / 1	
6	Lightning Impulse Withstand Voltage	To Earth	kV	75	
		Fracture		85	
7	Creepage Distance		mm	Not less than 372 (e-level)	
8	Mechanical Life		Times	500	
9	Usage Life Span		Years	Not greater than 20	
If the altitude is over 1000m, the rated insulation level should be modified as appropriate					

Note: If the parameters requested by the user are beyond the scope of the above table, they can be determined after consultation with our company.

(H)RW12 OUTDOOR THREE-PHASE DROP-OUT FUSE CUTOUT

5. OUTLINE AND INSTALLATION DIMENSIONS

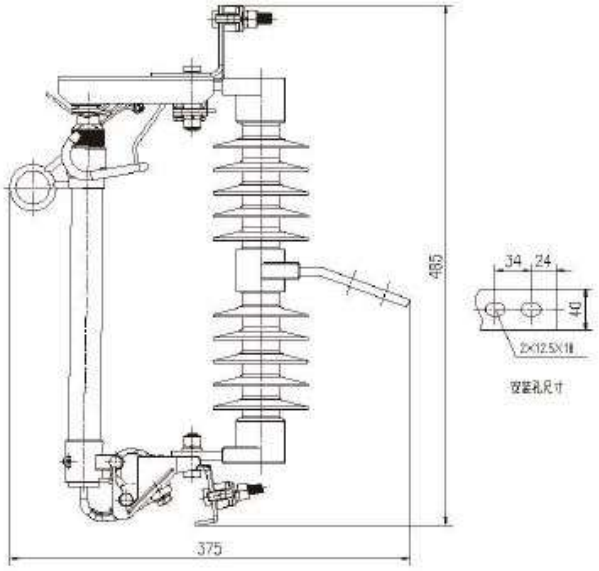

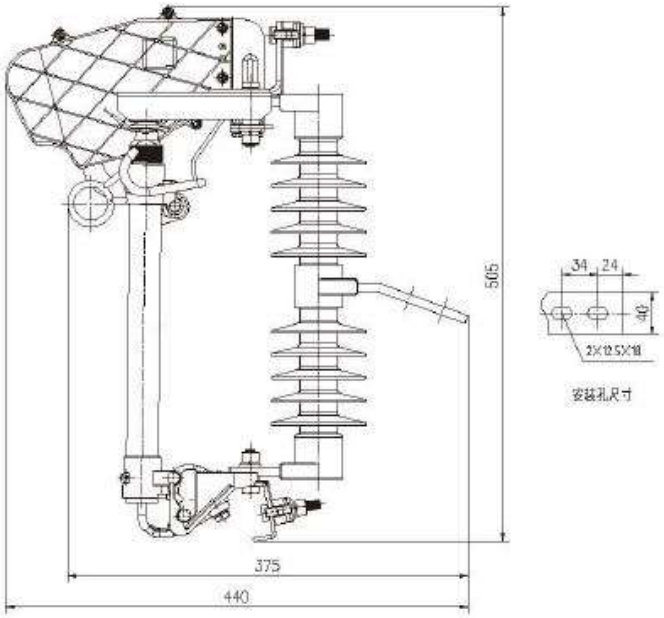

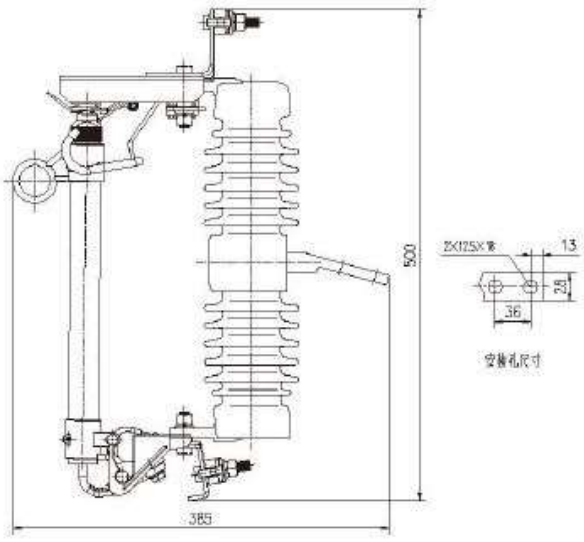

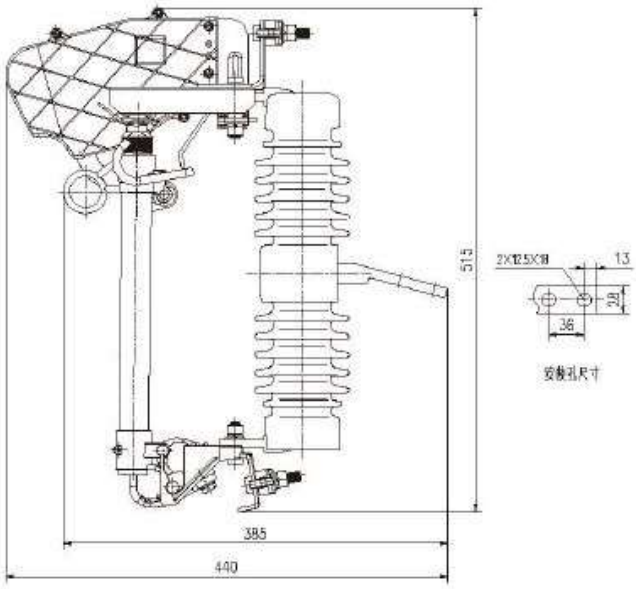

© DENGGAO ELECTRIC CO. LTD; ALL RIGHTS RESERVED

登高电气有限公司
DENGGAO ELECTRIC CO.,LTD.
HEADQUATERS: NO. 208 WEI WU ROAD, ECONOMIC DEVELOPMENT ZONE, YUEQING-WENZHOU, ZHEJIANG-CHINA
PHONE NUMBER: 0577 – 57576678
EMAIL ADDRESS: sale@dggpower.com

DGG 登高