DGG

BROCHURE / CATALOG >>>>>

https://www.dggpower.com

DGG 登高

DGG 登高

YH5WS – 3 ~ 6kV

LIGHTNING ARRESTER

OUTDOOR / THREE-PHASE / COMPOSITE JACKET TYPE



登高电气有限公司
DENGGAO ELECTRIC CO.,LTD.

YH5WS – 3 ~ 6kV COMPOSITE JACKET LIGHTNING ARRESTER

1. SUMMARY

The lightning arrester is the basis for insulation coordination of various electrical equipment (such as transformer, reactor, capacitor, generator, motor, PT, CT, circuit breaker, contactor, etc.) in the power system. The internal and external insulation indexes (short-time power frequency withstand voltage, lightning impulse withstand voltage, operation impulse withstand voltage, etc.) of all electrical equipment in the power system are determined by the protection performance of the lightning arrester.

2. MODEL AND MEANING

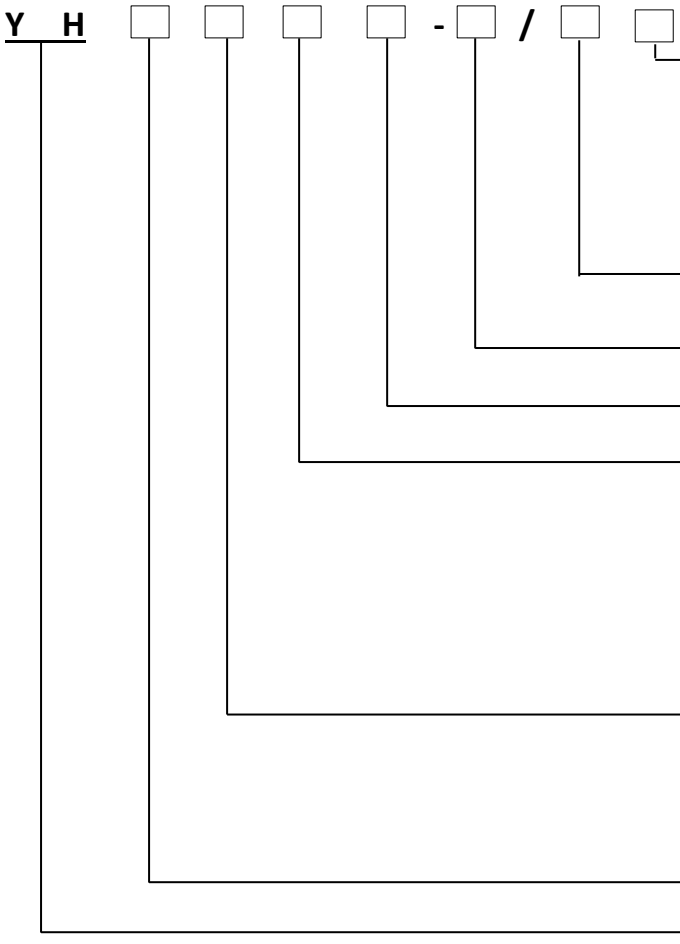

Additional Feature Code
G- Plateau Type
W- Antifouling Type
K- Seismic Type
T-Damp heat Type

Maximum Residual Voltage under Nominal discharge current (kV)

Rated Voltage of Arrester (kV)

Design Serial Number

Place of Usage
S- Power distribution type
R- Capacitive
T- Railway Type
X- Line Type
Oil Type
Z- Power Station type
D- Electric Motor
L- DC Type
F- GLS Type

Structural Feature
No Clearance C
Tandem Clearance B
Parallel Clearance

Nominal Discharge Current (kA)

Composite Jacket Insulation

3. NORMAL USAGE CONDITIONS

1. Ambient temperature: no higher than+40 ºC, no lower than - 40 ºC;
2. Altitude: no more than 3000 m;
3. Power frequency: 50 ± 2Hz; 60±2Hz;
4. Maximum wind speed: 35m/s;
5. Cleaning-free conditions: areas with medium pollution and below;
6. For gapless products, the power frequency voltage applied for a long time shall not exceed the continuous operation voltage of the arrester;
7. For products with gaps, the short-time power frequency voltage rise at the installation point shall not exceed the rated voltage of the arrester.

If the arrester is used for a long time under the following abnormal conditions, it shall be specially made, and it shall be stated when ordering:

1. The temperature or altitude exceeds the standard (such as plateau, tropical zone, cold zone, fully enclosed cabinet, close to an electric furnace, etc.);
2. The use environment has serious moisture or corrosive gas impurities (such as water, salt fields, chemical plants, etc.);
3. Strong ultraviolet radiation (such as plateau, drought area with strong sunshine, etc.);
4. Extremely polluted areas (such as mine working face, construction site working face, etc.)

4. NORMAL USAGE CONDITIONS

This product is used in power generation, transmission, transformation, and distribution systems of AC 220kV and below, and is used to limit the amplitude of lightning and internal switching overvoltage of the system to the specified level. It is the basic equipment for insulation coordination of the entire system. At the same time, this product cannot be used to limit resonance overvoltage, and other methods are required for system harmonic elimination.

The model of this product is prepared in accordance with JB/T 8459-2006 Preparation Method of Arrester Product Model and gapless products shall comply with GB 11032-2000 AC Gapless Metal Oxide Arrester;

The products with gaps shall comply with the standard of Metal Oxide Surge Arresters with Series Gaps (J B/T 9672-2005).

Important parameters and configuration methods not clearly defined in the above standards shall be corrected according to the requirements of DL/T 620-1997 Overvoltage Protection and Insulation Coordination for AC Electrical Installations.

5. TECHNICAL PARAMETER TABLE

Arrester Model	Place of use of lightning Arrester	Valid Value			Maximum residual pressure (peak)		
		Arrester rated Voltage (kV)	Nominal Voltage of System (kV)	Continuous running voltage (kV)	Under Steep slope impact current (kV)	Under lightning Impulse current (kV)	Under Operating impulse current (kV)
YH5WS – 3.8/15	S – Power distribution type	3.8	3	2.0	17.3	15.0	12.8
YH5WS – 5/15		5	3	4.0	17.3	15.0	12.8
YH5WS – 7.6/30		7.6	6	4.0	34.6	30.0	25.6
YH5WS – 10/35		10	6	8.0	34.6	30.0	25.6

Arrester Model	1mA DC reference Voltage (kV)	2000μs square wave current capacity (peak) A	4/10 High current tolerance (kA)	Maximum leakage current at 0.75 times DC reference voltage (μA)	Creepage distance (mm)
YH5WS – 3.8/15	≥ 7.5	75	65	50	145
YH5WS – 5/15	≥ 7.5				
YH5WS – 7.6/30	≥ 15.0				210
YH5WS – 10/35	≥ 15.0				

Note: If the parameters requested by the user are beyond the scope of the above table, they can be determined after consultation with our company.

6. OUTLINE AND INSTALLATION DIMENSIONS

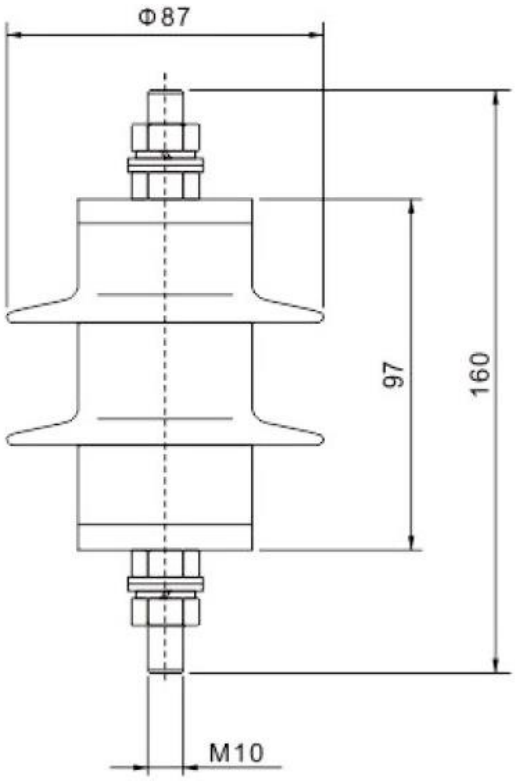

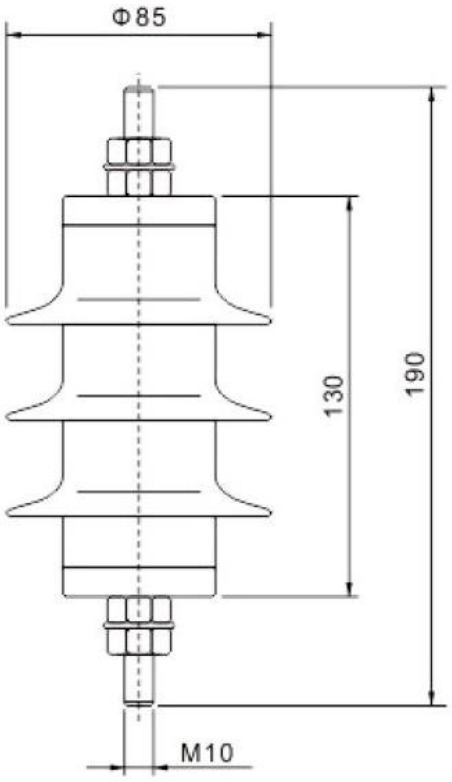

© DENGGAO ELECTRIC CO. LTD; ALL RIGHTS RESERVED

登高电气有限公司
DENGGAO ELECTRIC CO.,LTD.
HEADQUATERS: NO. 208 WEI WU ROAD, ECONOMIC DEVELOPMENT ZONE, YUEQING-WENZHOU, ZHEJIANG-CHINA
PHONE NUMBER: 0577 – 57576678
EMAIL ADDRESS: sale@dggpower.com

DGG 登高